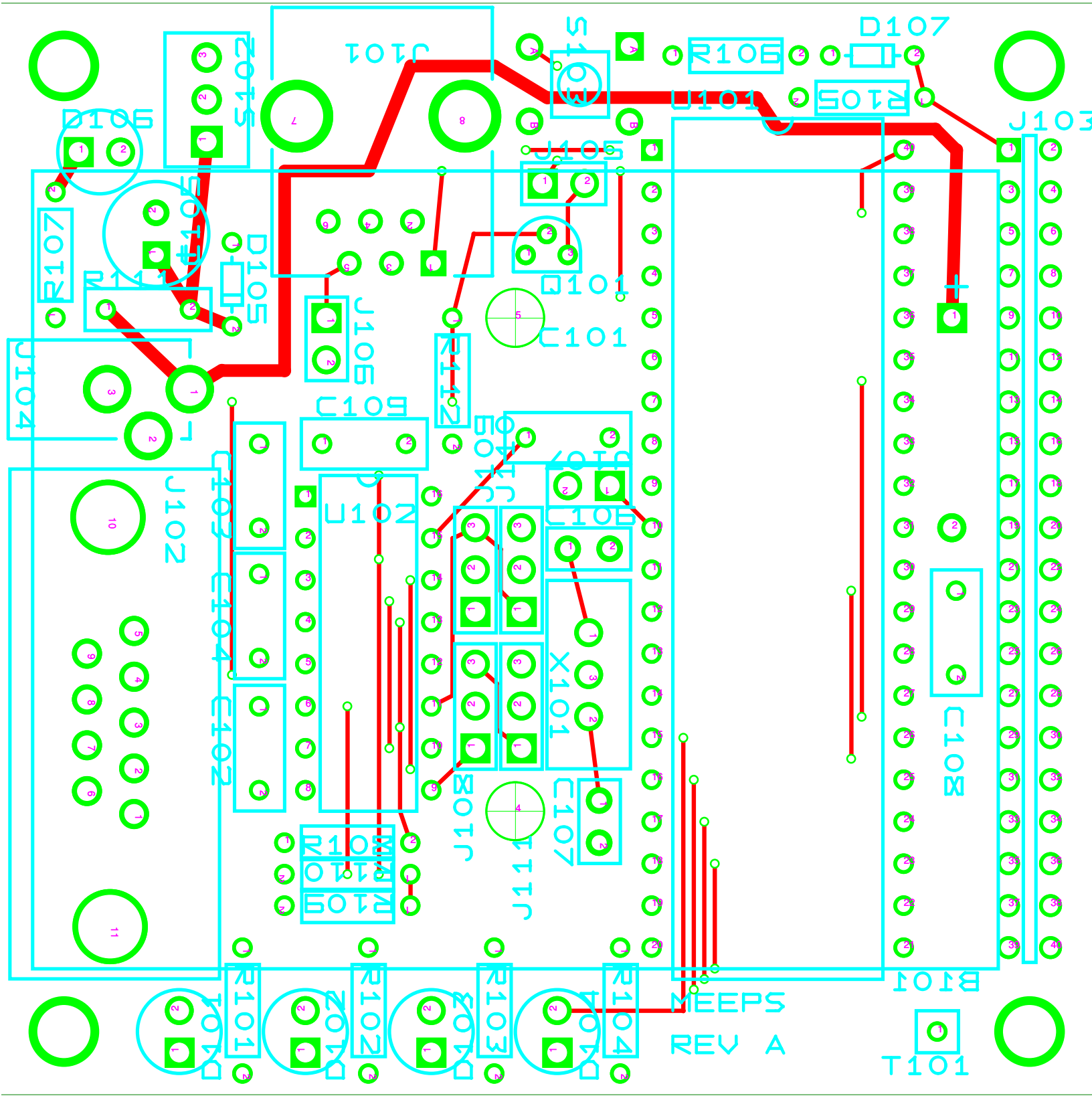
MEEPS
REV A